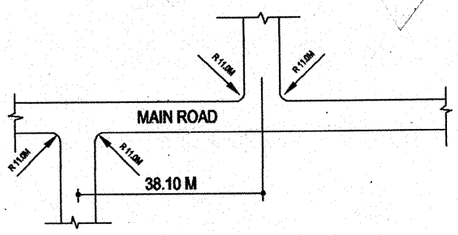

TYPICAL STAGGERED JUNCTION OF LIGHT TRAFFIC ROAD WITH MAIN ROAD

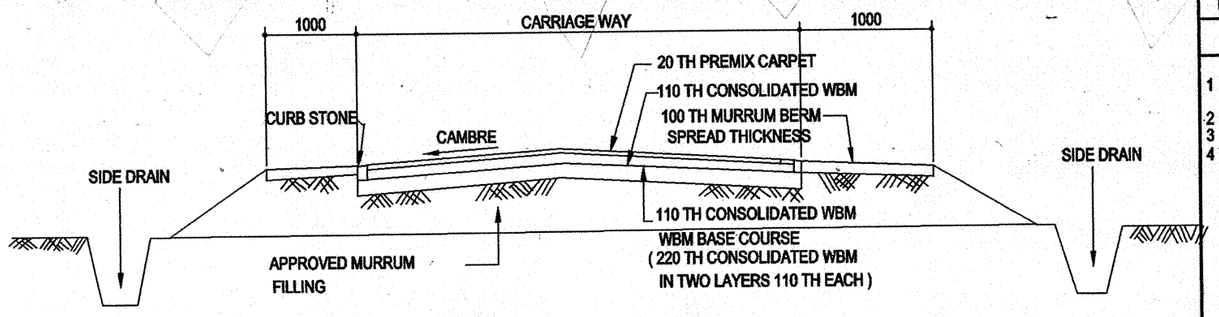

TYP. CROSS SECTION THROUGH ROAD IN FILLING
1 M WIDE MURRUM BERMS ON OTHER SIDE SCALE 1:50

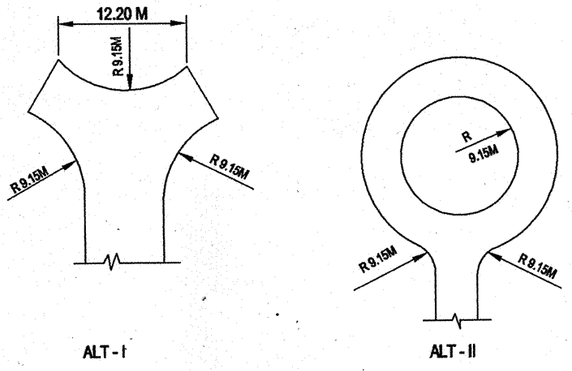

DETAIL OF CUL-DE-SACS

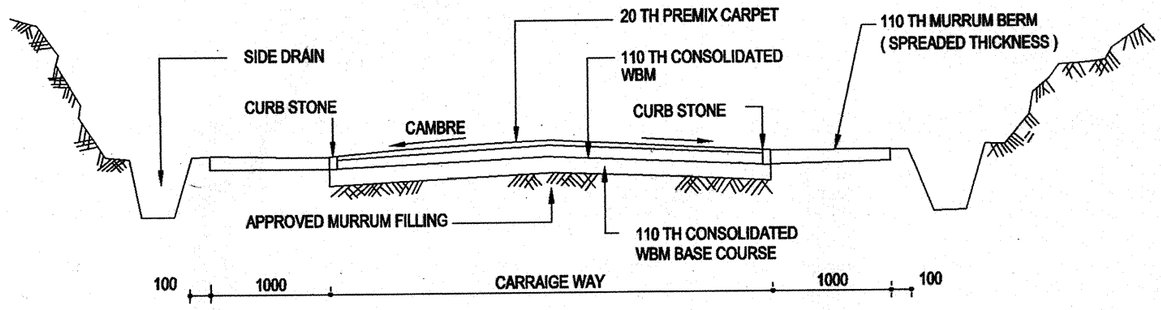

TYP. CROSS SECTION THROUGH ROAD IN CUTTING WITH
1 M WIDE MURRUM BERMS ON EITHER SIDE.

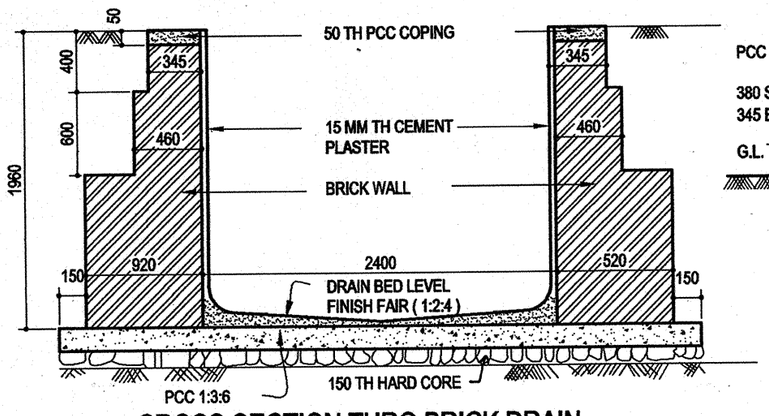

CROSS SECTION THRO BRICK DRAIN
SCALE 1:40

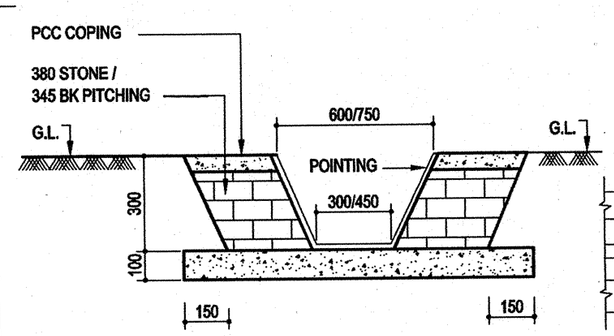

TYPICAL CROSS SEC, THRD STORM WATER DRAIN
SCALE 1:20

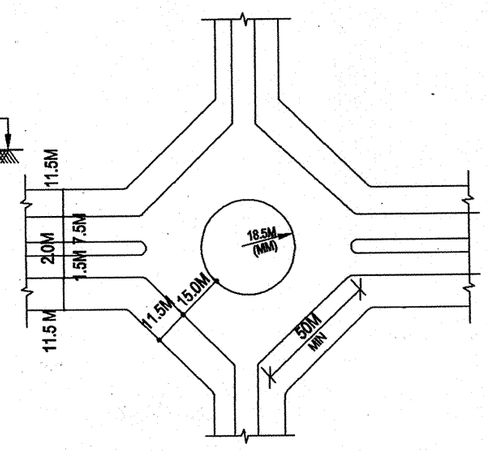

RD -1 TO RD - 4
TYPICAL DETAIL

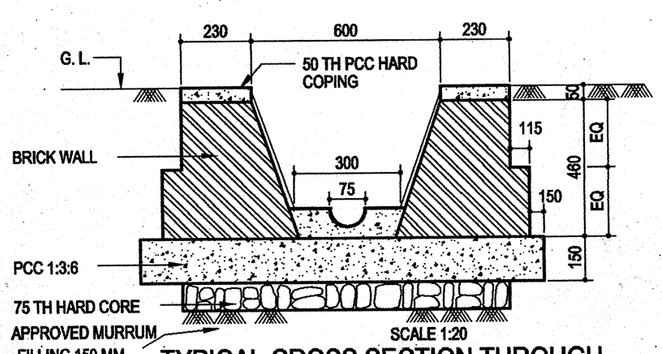

TYPICAL CROSS SECTION THROUGH 300 WIDE BRICK DRAIN (AT BOTTOM)
SCALE 1:20

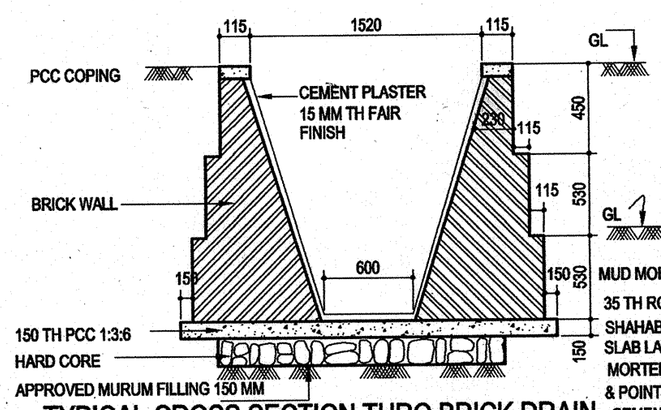

TYPICAL CROSS SECTION THRO BRICK DRAIN 600 WIDE AT BOTTOM
SCALE 1:40

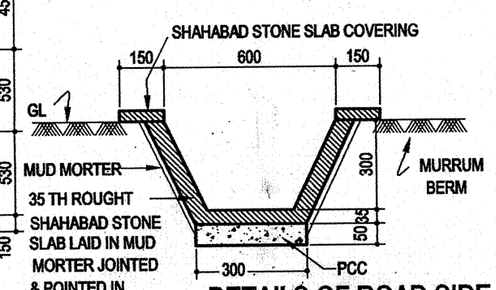

DETAILS OF ROAD SIDE PUCCA DRAIN
SCALE 1:20

DRG. NO. CEPZ/92/TD/11M | SHEET NO 2/2

NOTES

1 CONTRACTOR TO CHECK AND VERIFY ALL DIMENSIONS BEFORE EXECUTION OF THE WORK
2 FIGURED DIMENSIONS SHALL BE FOLLOWED
3 ALL DIMENSIONS ARE GIVEN IN MILLIMETRES UNLESS OTHERWISE STATED.
4 IN CASE OF BLOCK COTTON SOIL A DEPTH OF 600 mm THICK B.C SOIL IS TO BE REMOVED UNDER THE ROADS AND BERMS AND FILLED WITH APPROVED MURRUM ONLY CONSOLIDATED IN LAYERS IN CASE OF DRAINS 300 mm THICK B.C SOIL BELOW THE FOUNDATION OF DRAIN IS TO BE REMOVED AND FILLED WITH MURRUM.

COMPARED BY
R M LONDHE D'Man II
DATE 7·6·2003
R. Rama Mohini C.D.

S NO	DATE	DESCRIPTION	INITIAL
1	7-6-03	CORRECTED UP TO DATE	RMCD

REVISION

TYPICAL DETAILS OF ROADS AND DRAINS

DRN		CHIEF ENGINEER PUNE ZONE PUNE	DATE 3-2-92
TCD	DAREKAR		SCALE AS SHOWN
CKD			
CD			

ASSTT. ARCHITECT
SENIOR ARCHITECT FOR CEPZ PUNE.

DRG. NO. CEPZ/92/TD/11M | SHT. 2/2

(35)
(46)